SHARP

LC-70LE661U
LC-60LE661U

Commercial LED Smart TVs

Affordable, Smart TVs to Engage Audiences in a Variety of Environments

These 70" Class (69.5" diagonal) and 60" Class (60.1" diagonal) Sharp commercial LED smart TVs combine full-HD image quality and stylishly thin profiles with a built-in digital tuner for the ultimate display experience. The LC-70LE661U and LC-60LE661U commercial LED smart TVs are perfect for sports bars, retail stores and other businesses that need to grab the attention of viewers for a new level of engagement.

Superb Image Quality

LC-70LE661U and LC-60LE661U commercial LED smart TVs have cutting-edge picture technology that deliver amazing detail, gorgeous colour depth and consistent image quality. The advanced pixel structure of the panels enables stunning 4 million : 1 dynamic contrast for deeper blacks and whiter whites. The smart TVs also feature the AquoMotion™ 240 Refresh Rate that delivers precision clarity during fast-motion scenes.

Thin, Lightweight Design

LC-70LE661U and LC-60LE661U commercial LED smart TVs owe their thin profiles to edge-lit LED backlighting. Streamlined for a pleasing appearance and minimal protruding parts, these monitors weigh only **75 lbs** and **52.9 lbs**, respectively, with a bezel thickness of only 0.4" making for easy placement in offices, public places, stores and other commercial establishments.

Enhanced Connectivity

Three (3) HDMI® inputs let you connect multiple HD sources like digital signage and cable boxes. A powerful RS-232C command set permits flexible remote control capabilities from connected devices. A built-in USB port lets you present a variety of digital content including photos, music and video.

Unique Wallpaper Mode

When the unit is turned off, **Wallpaper Mode** lets you display virtually any image you choose on the screen at a reduced light level that mirrors museum conditions, so your screen blends beautifully into your installed environment—all at extremely low power.

Bigger Screen, Slimmer Bezel

The 70" Class model has a 14 percent greater viewing area than a 65" Class screen, and the 60" Class model has 20 percent more viewing area than a 55" Class screen.* In addition, its super-slim bezel measures just 0.4".

Superb Support

A limited on-site commercial three-year warranty, plus Sharp's best-in-class customer support service is included.

Crystal Clear Sound

Powerful 20W audio features high-fidelity so all of your scenes sound as breathtaking as they look.

Integrated Smart Apps

Working through built-in Wi-Fi ®,** **SmartCentral**™ **Apps** lets you quickly and wirelessly connect to all the best apps, including a web browser. Gain instant access to movies with Netflix®, videos with YouTube®, music with Pandora®, photos with Flickr® and Picasa® and social apps like Facebook™.*** The **Remote Control App** allows you to change channels, volume, inputs, or power on/off and even adjust picture settings. In addition, the commercial LED smart TVs are **web browser-enabled** to visit all your favourite sites in a larger-than-life window.

* Based on data available as of July 1, 2014.
** Additional fees and/or subscriptions may apply.
*** Internet service required. Not all services available in all areas. Some services require subscription.

Specifications

Model Name		LC-70LE661U	LC-60LE661U
Installation		Landscape	
LCD Panel		70" Class (69.5" diagonal) TFT LCD	60" Class (60.1" diagonal) TFT LCD
	Max. Resolution	1,920 x 1,080 pixels	
	Max. Display Colour (approx.)	1.06 billion colours	
	Pixel Pitch (H x V)	0.8015 x 0.8015 mm	0.693 x 0.693 mm
	Max Brightness *1	300 cd/m²	
	Contrast Ratio	5,000 : 1	
	Dynamic Contrast Ratio	4,000,000 : 1	
	Viewing Angle (H/W)	176°/176° (CR ≧ 10)	
	Active Screen Area (W x H)	60.6" x 34.0"	52.4" x 29.5"
	Response Time	4 ms (grey to grey, avg.)	
	Backlight	LED, edge lit	
Computer Input	Video	HDMI, Analog RGB	
	Synchronization	Horizontal/vertical separation (TTL: positive/negative), Sync on green, Composite sync (TTL: positive/negative)	
	Plug & Play	VESA DDC2B	
	Power Management	VESA DPMS	
Video Colour System		NTSC-M/PAL-N/PAL-M	
Analog/Digital Tuner		NTSC/ATSC	
Input Terminals		HDMI x 3, Mini D-sub 15-pin x 1, Component Video RCA (Y, Cb/Pb, Cr/Pr) x 1, Composite Video RCA pin x 1, RCA pin (L/R) x 2, 3.5 mm-diameter mini stereo jack x 1, RS-232C x 1, ANT/Cable x 1, USB x 1	
Output Terminals		Audio: RCA pin (L/R) x 1, Digital audio output (optical) x 1	
Input/Output Terminals		Ethernet RJ-45 x 1	
Speaker Output		10W + 10W	
Power Supply		100V - 240V AC, 50/60 Hz	
Power Consumption		180 W	150 W
Environmental Conditions	Operating Temperature	0°C to 40°C	
	Operating Humidity	30% to 80% RH (no condensation)	
Dimensions (W x D x H) (approx.) (display only)		61-35/64" x 3-7/16" x 35-53/64"	53-23/64" x 3-25/64" x 31-3/16"
Weight (approx.)		75 lbs.	52.9 lbs.

*1 Brightness will depend on input mode and other picture settings. Brightness level will decrease over time. Due to the nature of the equipment, it is not possible to precisely maintain a constant level of brightness.

Dimensions

LC-70LE661U

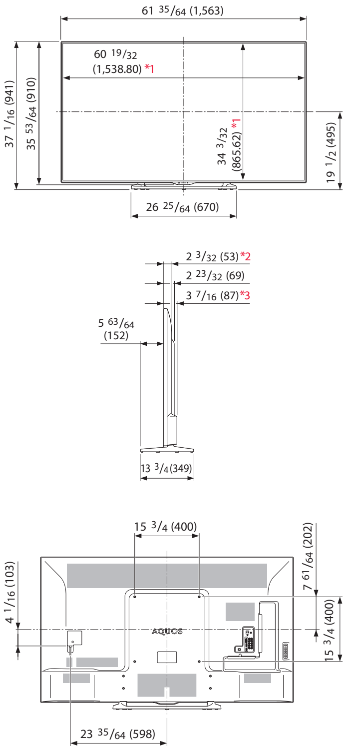

LC-60LE661U

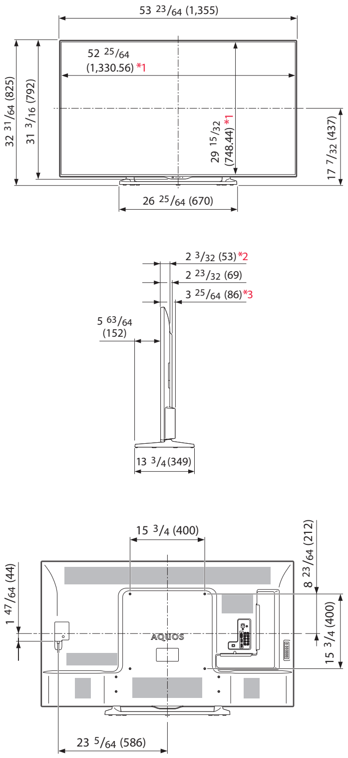

Unit: inch (mm)
*1 Active area, *2 Thinnest part, *3 Including projecting parts

Design and specifications are subject to change without notice. Sharp, AquoMotion and SmartCentral are trademarks or registered trademarks of Sharp Corporation and/or its affiliated entities. Wi-Fi is a registered trademark of the Wi-Fi Alliance, the official governing body for promoting Wi-Fi technology on a worldwide level. Netflix is a registered trademark of Netflix, Inc. Pandora is a registered trademark of Pandora Media, Inc. YouTube and Picasa are registered trademarks of Google, Inc. Flickr is a registered trademark of Yahoo! Inc. Facebook is a trademark of Facebook, Inc. HDMI and High-Definition Multimedia Interface are trademarks or registered trademarks of HDMI Licensing LLC in the United States and other countries. The ENERGY STAR logo is a certification mark and may only be used to certify products that have been determined to meet the ENERGY STAR program requirements. ENERGY STAR is a US registered mark. The ENERGY STAR guidelines apply to products only in the US, the EU, Japan, Canada, Australia, New Zealand, and Taiwan. All other trademarks are property of their respective owners. All screen images appearing in this brochure are simulated.

SHARP ELECTRONICS OF CANADA LTD.
335 Britannia Road East, Mississauga, Ontario L4Z 1W9
(905) 890-2100 • **www.sharp.ca**
©2015 Sharp Electronics of Canada Ltd.
Printed in Canada. M8300

SHARP®

LC-80LE642U

80″ CLASS (DIAGONAL) LED TV

6 SERIES LED SMART TV

AQUOS UV2A DISPLAY
Breathtaking HD images, greater brightness and contrast

SMART TV
With Dual-Core Processor and built-in Wi-Fi

120Hz REFRESH RATE
Precision clarity during fast-motion scenes

POWERFUL 20W AUDIO
High fidelity with Clear Voice

AQUOS®

Big, bold and brainy - the LC-80LE642U is an LED Smart TV that delivers legendary AQUOS picture quality and unlimited content choices, seamless control, and instant connectivity through SmartCentral™. The AQUOS UV2A Display dazzles with advanced pixel structure for the most breathtaking HD images, a 4 million: 1 dynamic contrast ratio, and a 120Hz refresh rate for precision clarity during fast-motion scenes. A Smart TV with Dual-Core processor and built in WiFi, the LC-80LE642U lets you quickly access apps streaming movies, music, games, and websites.

AQUOS® UV2A DISPLAY

AQUOS® UV2A Display with an advanced pixel structure for the most breathtaking HD images and 4 million: 1 contrast ratio

SmartCentral™ SMART TV

Unlimited content, control, and instant connectivity. AQUOS® TVs with SmartCentral™ give you more of what you crave. From the best streaming apps, to the easiest way to channel surf and connect your devices, it's that easy.

120Hz

Delivers crystal-clear images even during fast-motion scenes.

V-01 07/02/2013

SHARP

LC-80LE642U

80″ CLASS (DIAGONAL) LED TV

TECHNICAL SPECIFICATIONS

PANEL SPECIFICATIONS

Quattron™ Technology	–
Quad Pixel Plus 2	–
Display Panel Type	LCD
Backlight Type Source	LED-Full Array
Maximum Resolution	1920 x 1080, Full HD
Aspect Ratio	16x9
Dynamic Contrast Ratio	4,000,000:1
Refresh Panel Rate	120Hz
Refresh Scanning Rate	–
Super Bright™	–

BROADCAST SYSTEM

Analog	NTSC
Digital	ATSC/QAM

BEZEL & TABLE STAND

Narrow Bezel	Yes
Slim Profile	–
Bezel Color	Black
Stand Color	Black
Stand Type	Fixed

SPECIAL FEATURES

Wallpaper Mode	Yes
Gaming Mode	Yes
Vintage Movie mode	–

VIDEO

Optical Picture Control (OPC)	Yes
Enhanced Noise Reduction	Yes

AUDIO

Speakers (channel)	2
Speaker Location	Bottom, Down Firing
Speaker Output Power	10W+10W
Auto Volume Control	Yes
Clear Voice	Yes
Simulated Surround	Yes
Headphone Jack	–
Wall Mount Setting	Yes

AV INPUTS/OUTPUTS (#, LOCATION)

RS-232C	1
PC In (1-15 pin D-sub)	1
Total USB Input(s)	2
USB feature	Photo/Music/Video/Software Update
Total HDMI Input(s)	4
ARC (Audio Return Channel)	Yes (HDMI 1)
MHL	Yes (HDMI 4)
RF in (Antenna/Cable)	1
Component Video Input(s)	1
Composite Video Input(s)	2
Audio Input(s)	4
Audio Output(s)	1
Digital Audio Output	Optical

CONNECTIVITY

Ethernet	Yes
Built-in Wireless	Yes (801.11 a/b/g/n)
IP Control	Yes
Bluetooth	–

SMART

Smart Apps	Yes
Dual Core Processor	Yes
Remote Control Apps (iOS/Android)	Yes
Web Browser	Yes
Web+TV Split Screen	Yes
Skype (FREETALK® TV Camera sold separately)	Yes
DLNA Certified®	Yes
MHL Compatible	Yes

3D

Type	–
Bluetooth 3D Glasses	–

CONVENIENCE FEATURES

Remote Type	Universal
Child Lock	Yes
Sleep Timer	Yes
Closed Caption	Yes
V-Chip	Yes
Language (English/French/Spanish)	Yes

POWER

Power Source (Voltage, Hz)	AC 120V, 60Hz
ENERGY STAR® Qualified (version 6.0)	Yes

WALL MOUNT

VESA Compliant	Yes (600mm x 400mm)

DIMENSIONS/WEIGHT (inches/lbs.)

Excluding stand (w x h x d)	73-5/16″ x 43 25/32″ x 3 29/32″
Including stand (w x h x d)	73 5/16″ x 45 3/32″ x 17 3/32″
Shipping (w x h x d)	80 5/32″ x 49 1/8″ x 12 5/16″
Product Weight (Excluding Stand/ Including Stand	122.4 lbs/131.2 lbs
Shipping Weight	153.2 lbs

WARRANTY/UPC

Parts	1 year limited
Labor	1 year limited
UPC	074000376205

© 2013 Sharp Electronics Corporation. Sharp, Aquos, SmartCentral, Quattron and related trademarks are trademarks or registered trademarks of Sharp Corporation and/or its affiliated entities.
The Skype name, associated trade marks and logos are trade marks of Skype or related entities. Netflix is a registered trademark of Netflix, Inc. Pandora is a registered trademark of Pandora Media, Inc. YouTube is a trademark of Google, Inc. MHL and the MHL logo are a trademark, registered trademark or service mark of MHL, LLC in the United States and/or other countries. HDMI, the HDMI logo and High-Definition Multimedia Interface are trademarks or registered trademarks of HDMI Licensing LLC in the United States and other countries. All other trademarks are property of their respective owners.

Product specification and design are subject to change without notice.

SHARP ELECTRONICS CORPORATION
Sharp Plaza, Mahwah, NJ 07495
1-800-BE-SHARP or aquos@sharpusa.com
www.sharpusa.com

SHARP

LC-80LE642U

80″ CLASS (DIAGONAL) LED TV

MODEL FEATURES

PICTURE QUALITY

AQUOS UV2A DISPLAY

The AQUOS® UV2A Display with advanced pixel structure brings you the most breathtaking HD images. Using photo-alignment technology that's precision crafted to let more light through in bright scenes and shut more light out in dark scenes, the AQUOS UV2A Display with a 4 million: 1 contrast ratio creates a picture so real you can see the difference.

120Hz REFRESH RATE

See sharper, electrifying action, with the most advanced panel refresh rates available today. 120Hz technology delivers crystal-clear images even during fast-motion scenes.

AUTO BRIGHTNESS CONTROL (OPC)

Automatically adjusts picture brightness to the light in the room. This cuts power consumption, while giving you a more beautiful–and comfortable–picture to watch.

SMART

SMARTCENTRAL™

Sharp's intuitive SmartCentral™ lets you quickly connect to your favorite content. Working through built-in Wi-Fi, you can instantly access apps, streaming movies, music, games, and websites you love. Now that's smart.

DUAL-CORE PROCESSOR

Dual-core processing means faster load times for apps and the web browser. So you spend less time waiting and more time enjoying.

MOST POPULAR APPS

The apps you love are now accessible through Sharp's SmartCentral™. From instant access to movies with Netflix, to videos with YouTube®, music with Pandora® and Rhapsody®, social sites like Facebook and Twitter, video and voice calls with Skype™*, and the best of gaming – what you love is only a click away. (* FREETALK® TV Camera sold separately)

WEB BROWSER

Welcome to the world's most incredible web browser: your Sharp television. Big, beautiful, super-fast, and built-in, you can now visit all your favorite sites in a window larger than life.

SPLIT-SCREEN WEB + TV

Sharp's split-screen experience lets you surf the web while you watch TV, so you never have to choose between your favorite show and your favorite site. Technology that gives you the best of television and the best of the web – that's truly the best experience.

FLASH-ENABLED

Not all browsers are created equal. Sharp lets you see stunning Flash-created animations live from your browser so that you can focus on the content, not the compatibility.

REMOTE CONTROL APP

Your remote's never out of reach with Sharp's app that lets you change the channel right from your iOS® or Android™ smartphone or tablet.

SHARP BEAM

Beam app turns your smartphone into a fully functional content sharer that's simple and fun to use. Flick photos, videos, movies, and more from your smartphone or tablet to your big screen.

NETFLIX SECOND SCREEN

With Netflix Second Screen, you can browse and select the movie or show you want to watch on your smartphone and play it on your TV – instantly. Now the only thing standing between you and your favorite movies and TV shows is deciding which to watch.

BUILT-IN WI-FI

Every AQUOS® Smart TV has built-in Wi-Fi technology* that allows you to connect without the hassle of finding a cable.
(*Additional fees and/or subscriptions may apply)

HDMI®

When it comes to HD connections for your gear, the more the better. HDMI® lets you connect sources like your Blu-ray Disc™ player, cable box, and game consoles with the most advanced digital connections available today.

MHL®

An MHL® connection turns a small-screen phone into a big-screen experience. MHL delivers HD uncompressed video with up to eight channels of digital audio. Since MHL also charges the mobile device, you can power up at the same time you're connected. You can also control MHL-enabled mobile devices using your existing TV remotes to easily access and select content.

COMPATIBILITY

Sharp AQUOS® LED large screens are smarter smart TVs. They work seamlessly with virtually all your gear, from Blu-ray™ to cable boxes to gaming consoles. And with 4 HDMI® inputs, you can keep your options open.

REMOTE SOFTWARE UPDATES

Television at its smartest: your AQUOS® LED TV automatically updates its software as improvements and optimizations are developed.

DESIGN

WALLPAPER MODE

This innovative feature turns a blank screen into a work of art. When the TV is turned off, Wallpaper Mode lets you display virtually any image you choose on the AQUOS® LED screen at a reduced light level that mirrors museum conditions, so your screen blends beautifully into your room's decor. All at extremely low power. You can even set on and off times.

SOUND

20W AUDIO

Big sound to complete your big-screen experience. The powerful 20W audio features high fidelity with Clear Voice, so all of your scenes sound great.

SHARP

LC-90LE657U

90" CLASS (DIAGONAL) LED TV

6 SERIES LED SMART TV

AQUOS UV2A DISPLAY
Breathtaking HD images,
greater brightness and contrast

SMART TV
With Dual-Core Processor
and built-in Wi-Fi

120Hz REFRESH RATE
AquoMotion 240

ACTIVE 3D
Two 3D glasses included in box

SLIM DESIGN

POWERFUL 35W AUDIO
High fidelity with clear voice

AQUOS®

At 90 inches, it's the largest available LED TV on the planet. Big, bold and brainy - the LC-90LE657U is an LED Smart TV that delivers legendary AQUOS picture quality and unlimited content choices, seamless control, and instant connectivity through SmartCentral™. The AQUOS 1080p LED Display dazzles with advanced pixel structure for the most breathtaking HD images, an 8 million: 1 dynamic contrast ratio, and a 120Hz refresh rate with AquoMotion 240 for stunning picture clarity, even during fast-motion scenes. A Smart TV with Dual-Core processor and built-in Wi-Fi, the LC-90LE657U lets you quickly access apps, streaming movies, music, games, and websites you love.

AQUOS® UV2A DISPLAY

AQUOS® UV2A Display with an advanced pixel structure for the most breathtaking HD images and 4 million: 1 contrast ratio

SmartCentral™ SMART TV

Unlimited content, control, and instant connectivity. AQUOS® TVs with SmartCentral™ give you more of what you crave. From the best streaming apps, to the easiest way to channel surf and connect your devices, it's that easy.

120Hz

Delivers crystal-clear images even during fast-motion scenes.

V-03 05/08/2013

SHARP

LC-90LE657U

90″ CLASS (DIAGONAL) LED TV

TECHNICAL SPECIFICATIONS

PANEL SPECIFICATIONS	
Quattron™ Technology	–
Quad Pixel Plus 2	–
Display Panel Type	LCD
Backlight Type Source	LED-Full Array
Maximum Resolution	1920 x 1080, Full HD
Aspect Ratio	16:9
Dynamic Contrast Ratio	8,000,000:1
Refresh Panel Rate	120Hz
Refresh Scanning Rate	AquoMotion 240
Super Bright™	–

BROADCAST SYSTEM	
Analog	NTSC
Digital	ATSC/QAM

BEZEL & TABLE STAND	
Narrow Bezel	Yes
Slim Profile	Yes
Bezel Color	Aluminum (Black)
Stand Color	Black
Stand Type	Fixed

SPECIAL FEATURES	
Wall Paper Mode	Yes
Gaming Mode	Yes
Vintage Movie mode	–
AQUOS Advantage℠ Live	Yes

VIDEO	
Optical Picture Control (OPC)	Yes
Enhanced Noise Reduction	Yes

AUDIO	
Speakers(channel)	2.1
Speaker Location	Bottom, Front Facing
Speaker Output Power	10W +10W+ 15W (w/Subwoofer)
Auto Volume Control	Yes
Clear Voice	Yes
Simulated Surround	Yes
Headphone Jack	–
Wall Mount Setting	Yes

AV INPUTS/OUTPUTS (#, LOCATION)	
RS-232C	1
PC In (1-15 pin D-sub)	1
Total USB Input(s)	2
USB feature	Photo/Music/Video/Software Update
Total HDMI Input(s)	4
ARC	Yes (HDMI 1)
MHL	Yes (HDMI 4)
RF in (Antenna/Cable)	1
Component Video Input(s)	1
Composite Video Input(s)	2
Audio Input(s)	4
Audio Output(s)	1
Digital Audio Output	Optical

CONNECTIVITY	
Ethernet	Yes
Built-in Wireless	Yes (801.11 a/b/g/n)
IP Control	Yes
Bluetooth	Wireless Keyboard + Mouse (Sold separately)

SMART	
Smart Apps	Yes
Dual Core Processor	Yes
Remote Control Apps (iOS/Android)	Yes
Web Browser	Yes
Web+TV Split Screen	Yes
Skype (FREETALK® TV Camera sold separately)	Yes
DLNA Certified®	Yes
MHL Compatible	Yes

3D	
Type	Active 3D
Bluetooth 3D Glasses	AN-3DG40 (2 included)

CONVENIENCE FEATURES	
Remote Type	Universal
Child Lock	Yes
Sleep Timer	Yes
Closed Caption	Yes
V-Chip	Yes
Language (English/French/Spanish)	Yes

POWER	
Power Source (Voltage, Hz)	AC 120V, 60Hz
ENERGY STAR® Qualified (version 6.0)	–

WALL MOUNT	
VESA Compliant	Yes (600mm x 400mm)

DIMENSIONS/WEIGHT (inches/lbs.)	
Excluding stand (w x h x d)	2054 x 1211 x 116 mm 80-7/8″ x 47-11/16″ x 4-37/64″
Including stand (w x h x d)	2054 x 1243 x 434 mm 80-7/8″ x 48-61/64″ - 17-3/32″
Shipping (w x h x d)	2237 x 1461 x 335 mm 88-1/16″ x 57-1/2″ x 13-3/16″
Product Weight (Excluding Stand)	64.0 kg / 141.1 lbs
Product Weight (Including Stand)	68.0 kg / 150.0 lbs
Shipping Weight	92.5 kg / 203.9 lbs

WARRANTY/UPC	
Parts	1 year limited
labor	1 year limited
UPC	074000376175

Sharp, Aquos, SmartCentral, Quattron and related trademarks are trademarks or registered trademarks of Sharp Corporation and/or its affiliated entities.
The Skype name, associated trade marks and logos are trade marks of Skype or related entities. Netflix is a registered trademark of Netflix, Inc. Pandora is a registered trademark of Pandora Media, Inc. YouTube is a trademark of Google, Inc. MHL and the MHL logo are a trademark, registered trademark or service mark of MHL, LLC in the United States and/or other countries. HDMI, the HDMI logo and High-Definition Multimedia Interface are trademarks or registered trademarks of HDMI Licensing LLC in the United States and other countries. All other trademarks are property of their respective owners.

Product specification and design are subject to change without notice.

SHARP ELECTRONICS OF CANADA LTD.
335 Britannia Road East, Mississauga, Ontario, L4Z 1W9
www.sharp.ca
© 2013 Sharp Electronics of Canada Ltd.

SHARP

LC-90LE657U

90" CLASS (DIAGONAL) LED TV

MODEL FEATURES

PICTURE QUALITY

AQUOS UV2A DISPLAY

The AQUOS® UV2A Display with advanced pixel structure brings you the most breathtaking HD images. Using photo-alignment technology that's precision crafted to let more light through in bright scenes and shut more light out in dark scenes, the AQUOS UV2A Display with a 4 million: 1 contrast ratio creates a picture so real you can see the difference.

120Hz REFRESH RATE

See sharper, electrifying action, with the most advanced panel refresh rates available today. 120Hz technology delivers crystal-clear images even during fast-motion scenes.

AQUOMOTION 240

AquoMotion 240, Sharp's backlight scanning technology, doubles the effective refresh rate to hit you with all the power that fast-moving sports and movies can deliver.

AUTO BRIGHTNESS CONTROL (OPC)

Automatically adjusts picture brightness to the light in the room. This cuts power consumption, while giving you a more beautiful–and comfortable–picture to watch.

SMART

SMARTCENTRAL™

Sharp's intuitive SmartCentral™ lets you quickly connect to your favorite content. Working through built-in Wi-Fi, you can instantly access apps, streaming movies, music, games, and websites you love. Now that's smart.

DUAL-CORE PROCESSOR

Dual-core processing means faster load times for apps and the web browser. So you spend less time waiting and more time enjoying.

MOST POPULAR APPS

The apps you love are now accessible through Sharp's SmartCentral™. From instant access to movies with Netflix, to videos with YouTube®, music with Pandora® and Rhapsody®, social sites like Facebook and Twitter, video and voice calls with Skype™*, and the best of gaming – what you love is only a click away. (*FREETALK® TV Camera sold separately)

WEB BROWSER

Welcome to the world's most incredible web browser: your Sharp television. Big, beautiful, super-fast, and built-in, you can now visit all your favorite sites in a window larger than life.

SPLIT-SCREEN WEB + TV

Sharp's split-screen experience lets you surf the web while you watch TV, so you never have to choose between your favorite show and your favorite site. Technology that gives you the best of television and the best of the web – that's truly the best experience.

FLASH-ENABLED

Not all browsers are created equal. Sharp lets you see stunning Flash-created animations live from your browser so that you can focus on the content, not the compatibility.

REMOTE CONTROL APP

Your remote's never out of reach with Sharp's app that lets you change the channel right from your iOS® or Android™ smartphone or tablet.

SHARP BEAM

Beam app turns your smartphone into a fully functional content sharer that's simple and fun to use. Flick photos, videos, movies, and more from your smartphone or tablet to your big screen.

NETFLIX SECOND SCREEN

With Netflix Second Screen, you can browse and select the movie or show you want to watch on your smartphone and play it on your TV – instantly. Now the only thing standing between you and your favorite movies and TV shows is deciding which to watch.

BUILT-IN WI-FI

Every AQUOS® Smart TV has built-in Wi-Fi technology* that allows you to connect without the hassle of finding a cable.
(*Additional fees and/or subscriptions may apply)

HDMI®

When it comes to HD connections for your gear, the more the better. HDMI® lets you connect sources like your Blu-ray Disc™ player, cable box, and game consoles with the most advanced digital connections available today.

MHL®

An MHL® connection turns a small-screen phone into a big-screen experience. MHL delivers HD uncompressed video with up to eight channels of digital audio. Since MHL also charges the mobile device, you can power up at the same time you're connected. You can also control MHL-enabled mobile devices using your existing TV remotes to easily access and select content.

COMPATIBILITY

Sharp AQUOS® LED large screens are smarter smart TVs. They work seamlessly with virtually all your gear, from Blu-ray™ to cable boxes to gaming consoles. And with 4 HDMI® inputs, you can keep your options open. A TV that's compatible across so many devices – that's truly astonishing.

AUTOMATIC SOFTWARE UPDATES

Television at its smartest: your AQUOS® LED TV automatically updates its software as improvements and optimizations are developed.

DESIGN

SLIM DESIGN

Fit more screen in less space. The brilliant AQUOS® LED display is embraced by a striking new frame that's thinner around the screen and slimmer in depth, so it can fit just about anywhere.

WALLPAPER MODE

This innovative feature turns a blank screen into a work of art. When the TV is turned off, Wallpaper Mode lets you display virtually any image you choose on the AQUOS® LED screen at a reduced light level that mirrors museum conditions, so your screen blends beautifully into your room's decor. All at extremely low power. You can even set on and off times.

SOUND

35W AUDIO

Big sound to complete your big-screen experience. The powerful 20W audio features high fidelity with clear voice, so all of your scenes sound great.

3D

FULL HD ACTIVE 3D

All 3D is not created equal. Sharp's Full HD Active 3D produces a brighter, crisper picture, a 3D experience that truly does blow people away.

2D/3D SWITCH

With Sharp 3D glasses, you can switch from 3D to 2D any time you want – without affecting anyone else in the room. With Sharp 3D, everyone gets what they like.